Using Cladistics

Your group will be examining the features of coins. You will use a penny, a nickel, a dime, and a quarter for this investigation.

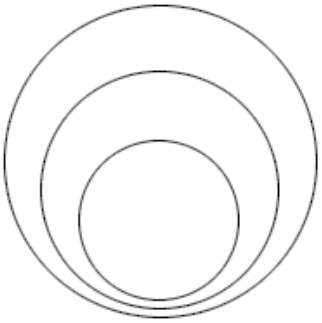

1. Create a diagram using these three features: round, silver-colored, and rib-edged. Use the diagram below to help you.

2. Answer these questions:

- What feature do all the coins share?
- Which coins are silver-colored?
- What feature do only two of the coins share?

3. Look at the cladogram. The letter A on the cladogram is labeled *round*. All the coins share this feature. Use your answers for the questions in #2 to label B and C.

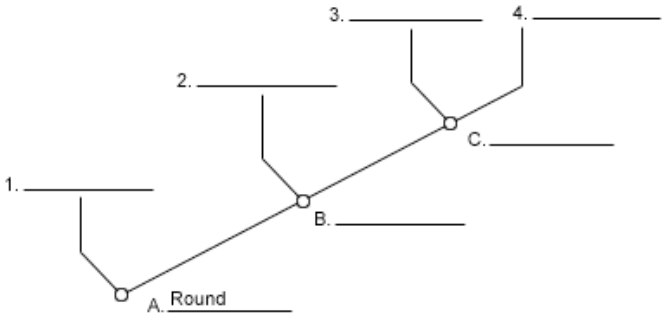

4. What coin is round, but does not share any more features with the other coins? Write the name of the coin in # 1 on the cladogram. Use your answers for the questions in #2 to label 2, 3, and 4 on the cladogram.

5. When you have completed the task, compare your cladogram with those of other groups.